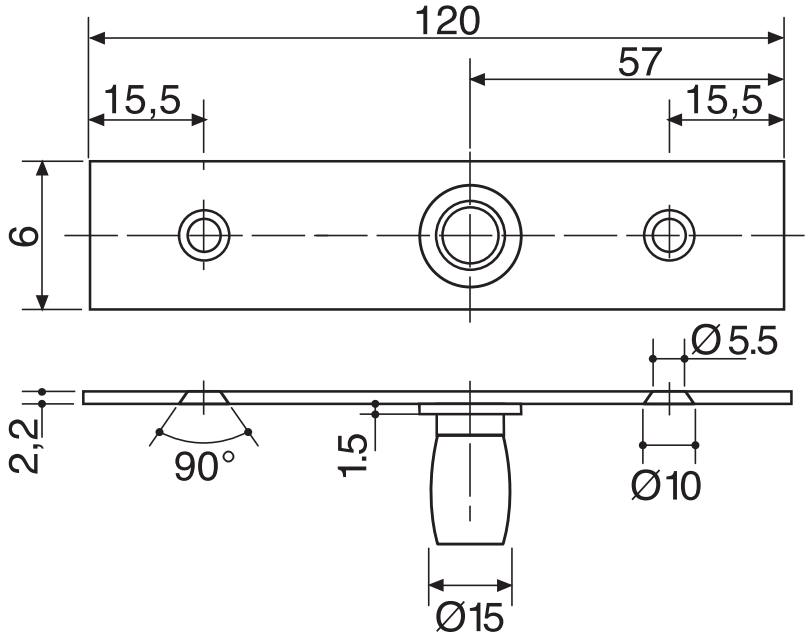PF502